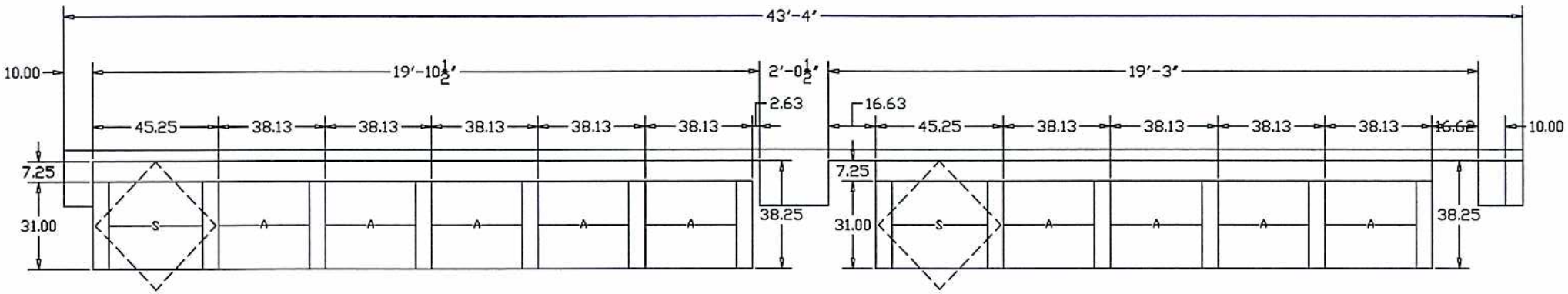

REVISION DATE	NO.	1	DRAWN BY:	CH'KD:
		SCALE: NTS	DWG. NO. 2 OF 2	

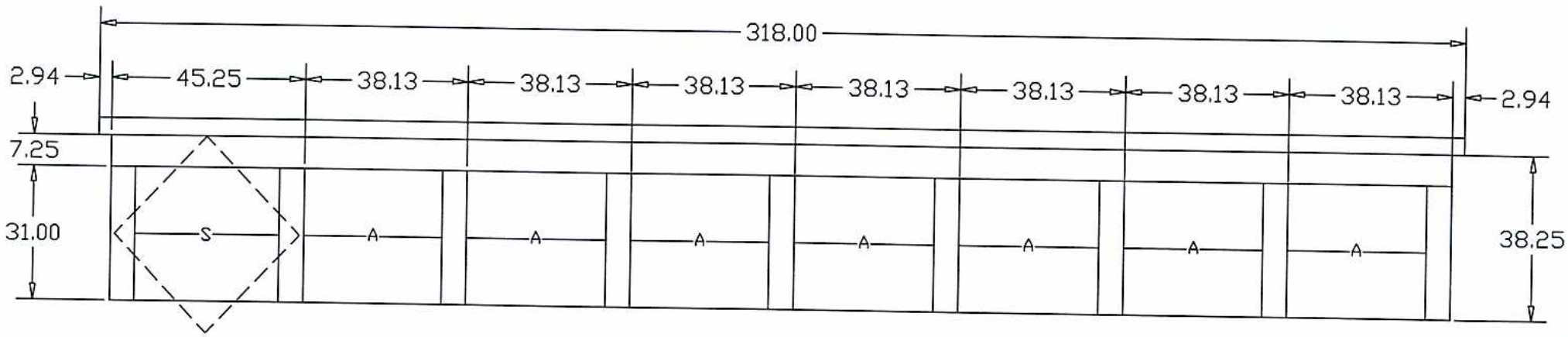

REVISION DATE	NO.		DRAWN BY:	CH'KD:
		SCALE: NTS	DWG. NO. 1 OF 2	